Product data sheet
Characteristics

XZCPV51V3L1
Pre wired connectors XZ, elbowed male, M12, 4 pins, cable PVC 1 m



Main

Range of product	Telemecanique Cabling components
Accessory / separate part categor	Cabling accessory
Accessory / separate part type	Pre-wired connectors
Series name	General purpose

Complementary

Electrical connection	Elbowed male connector M12, 4 pins
Cable connector fixing	Screw-on
Collar material	Metal
Status LED	Without
Cable length	1 m
Cable outer diameter	4.6 mm
Cable composition	4 x 0.25 mm²
Wire insulation material	PVC
[Ue] rated operational voltage	250 V AC 300 V DC
[In] rated current	3 A
Contact resistance	5000 µOhm
Minimum insulating resistance	1 GΩ
Net weight	0.052 kg

Environment

IP degree of protection	IP67 IP65
Product certifications	cULus
Ambient air temperature for operation	-25…80 °C static
Ambient air temperature for storage	-25…80 °C

Packing Units

Unit Type of Package 1	PCE
Number of Units in Package 1	1
Package 1 Height	2.0 cm
Package 1 Width	12.0 cm
Package 1 Length	13.0 cm
Package 1 Weight	51.0 g
Unit Type of Package 2	S02
Number of Units in Package 2	50
Package 2 Height	15.0 cm
Package 2 Width	30.0 cm
Package 2 Length	40.0 cm
Package 2 Weight	3.005 kg

The information provided in this documentation contains general descriptions and/or technical characteristics of the performance of the products contained herein.
This documentation is not intended as a substitute for and is not to be used for determining suitability or reliability of these products for specific user applications.
It is the duty of any such user or integrator to perform the appropriate and complete risk analysis, evaluation and testing of the products with respect to the relevant specific application or use thereof.
Neither TMSS Holding nor any of its affiliates or subsidiaries shall be responsible or liable for misuse of the information contained herein.

Offer Sustainability

California proposition 65	WARNING: This product can expose you to chemicals including: Diisononyl phthalate (DINP), which is known to the State of California to cause cancer, and Di-isodecyl phthalate (DIDP), which is known to the State of California to cause birth defects or other reproductive harm. For more information go to www.P65Warnings.ca.gov
For all Reach Rohs enquiries contact us at	sustainability@tesensors.com

XZCPV51V3L1

Dimensions

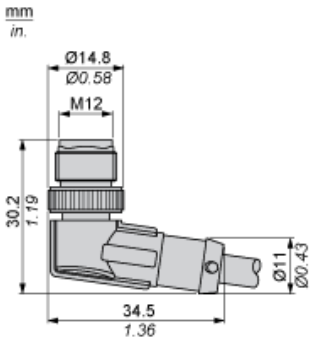

Connections and Schemes

Connector

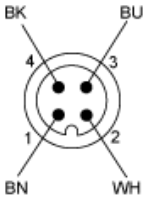

BN : Brown
BK : Black
BU : Blue
WH : White